newblinds.co.uk

Strong Motor

Strong

newblinds.co.uk

MOTOR

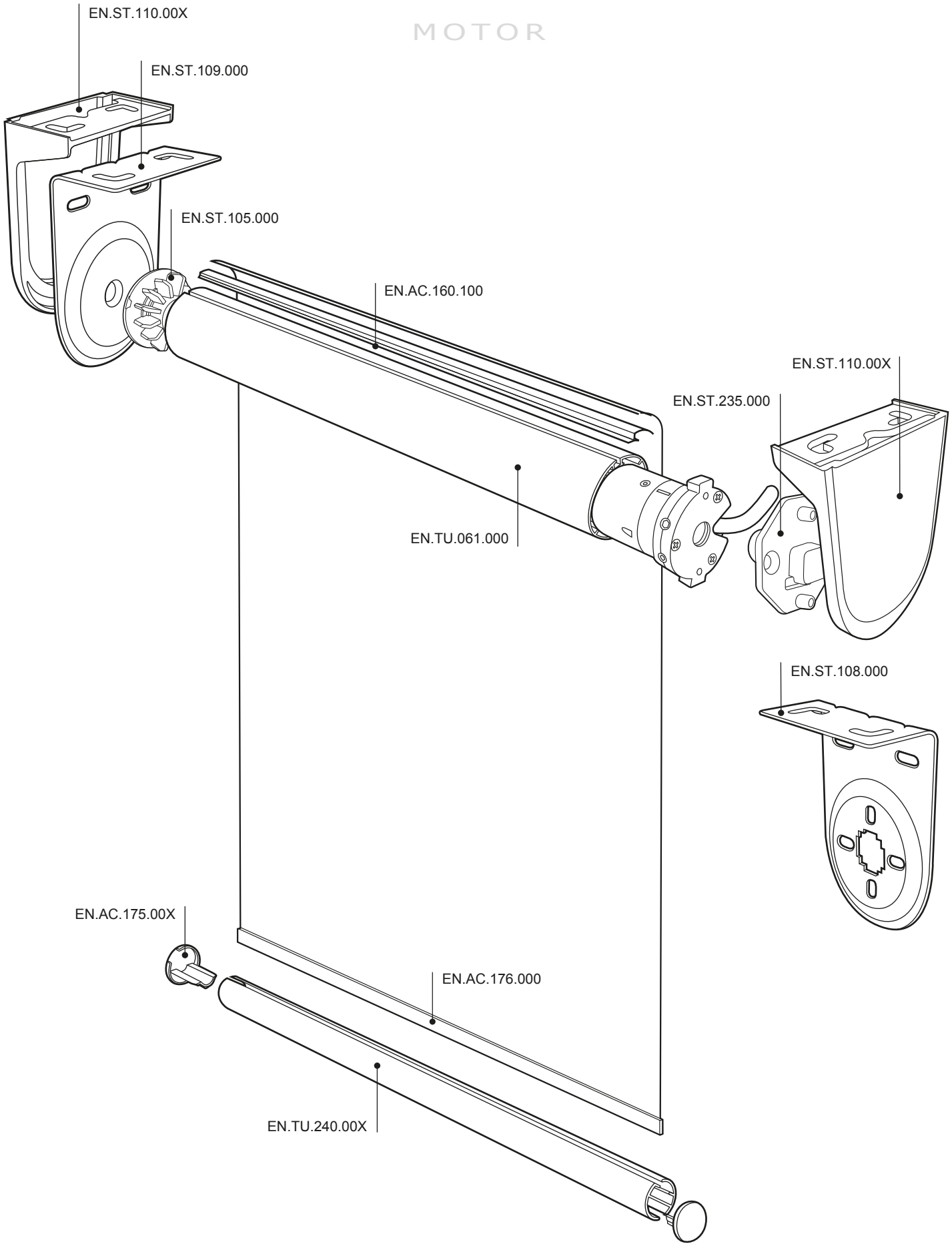

Strong
Motor

newblinds.co.uk

61 mm. 1:4

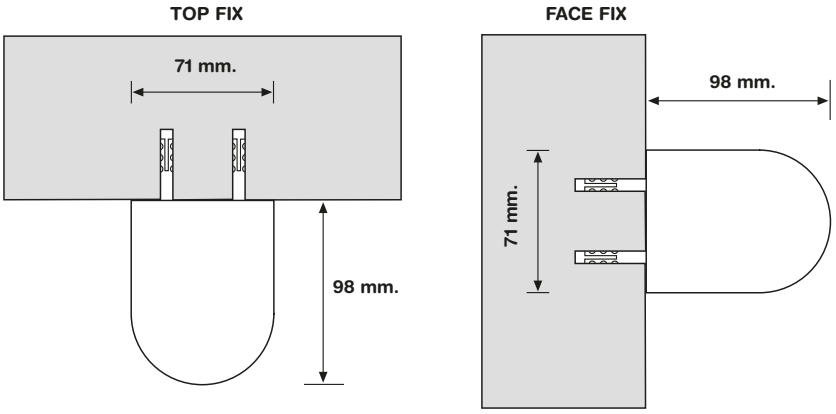

32 mm.

MAXIMUM WEIGHT AND SIZES

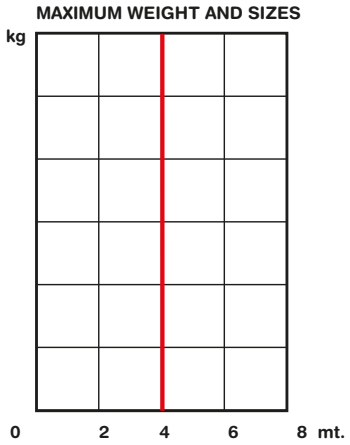

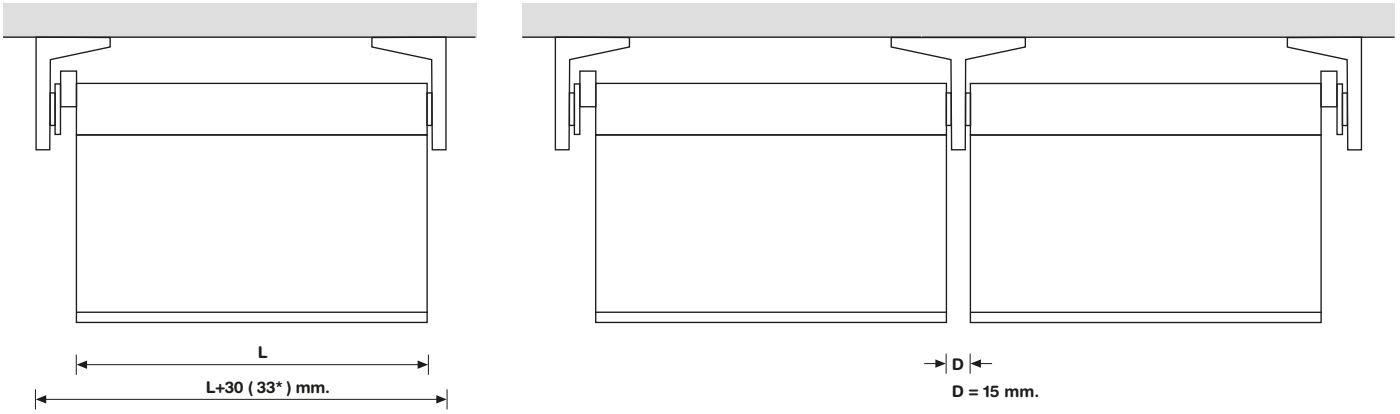

- L = Measure cut of tube
- D = Gap